www.jbctools.com

P&P Guide

ALEP

Angled Automatic-Feed Soldering Station

This Plug & Play Guide corresponds to the following references:

Ref. **ALEP-108VA**
Ref. **ALEP-208VA**
Ref. **ALEP-908VA**

Ref. **ALEP-110VA**
Ref. **ALEP-210VA**
Ref. **ALEP-910VA**

Information

Web page of the latest product version

Video Guide

Watch the product video

Packing List

The following items are included:

Angled Automatic-Feed Soldering Iron ..... 1 unit
Ref. ALEP250-A

Stand for ALE250-A and ALEP250-A Automatic-Feed Soldering Iron ..... 1 unit
Ref. ALE-SA

Conical Bent Cartridge Ø 1 ..... 1 unit
Ref. C250403

Solder Wire Guide Kit ..... 1 unit
According to purchased station reference.

Pedal ..... 1 unit
Ref. P-405

Cartridge Holder ..... 1 unit
Ref. SCH-A

Cartridge Extractor Pliers ..... 1 unit
Ref. PLR196

Installation

Before you can start working, follow the assembly steps in this P&P Guide.

Note: The solder diameter must match the ALE model purchased. Make sure the solder wire diameter is compatible with the wheels already installed in the ALE control unit.

**Solder reel is not included.*

Tools Needed

The required tools are located on the control unit.

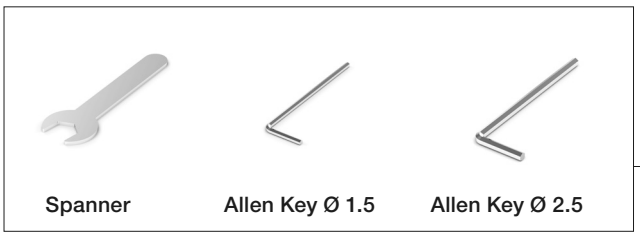

Step 1 **Solder Reel Assembly**

Loosen the reel locking screw (1) and remove the reel locking from the axis (2).

Assemble the solder reel onto the axis (3).

Assemble the solder reel in such a way - when viewed from above - that the solder wire unwinds on the dispensing mechanism side (4).

Then pass the solder wire through the wire guidance (5).

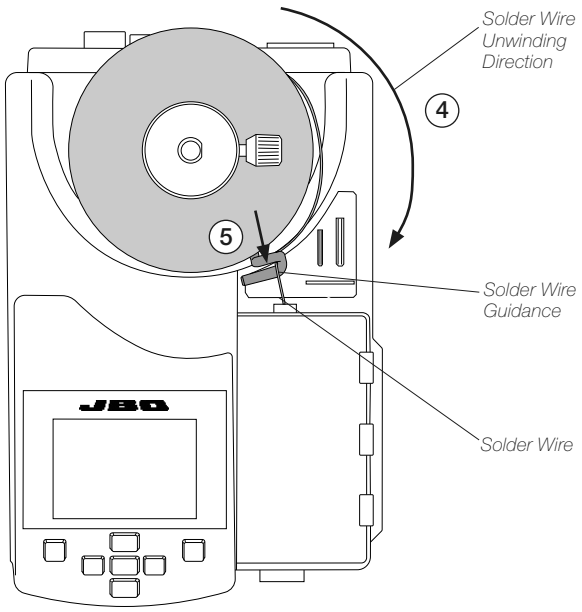

Watch the product assembly video

Step 2 **Reel Locking Assembly**

To assemble the reel locking, its conical side must be pointing downwards (1).
Make sure that the reel locking screw is slightly backed out and does not collide with the axis (2).

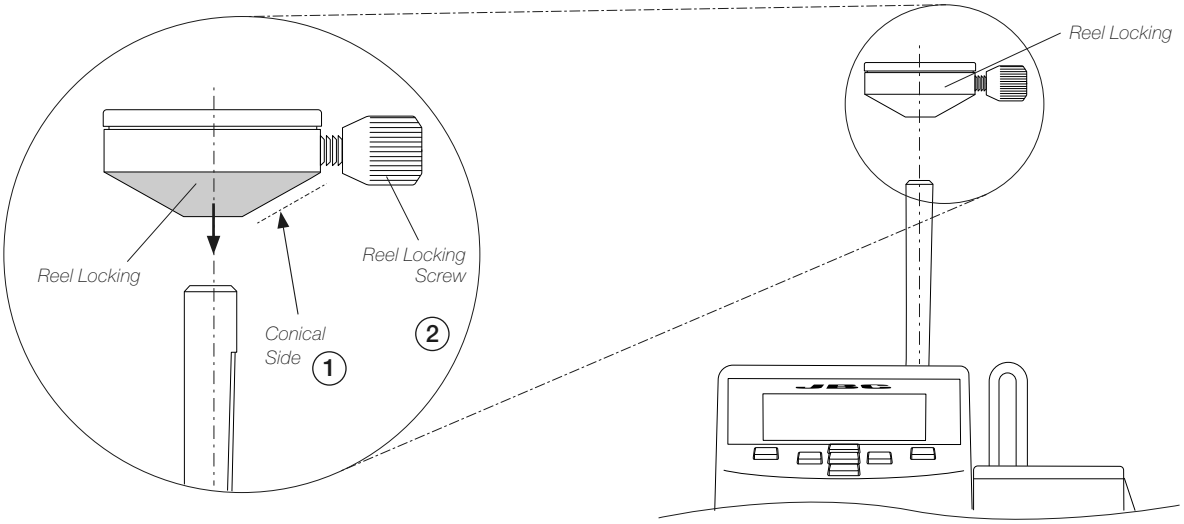

Align the flat side of the axis with the inner flat side of the reel locking (3) and assemble the reel locking to the axis (4).

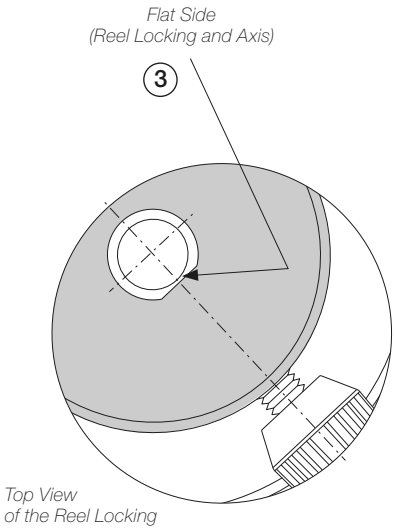

Note: To prevent the solder reel from spinning freely or binding, gently press the reel locking down, but only enough to allow the solder reel to rotate freely, before tightening the reel locking screw (5).

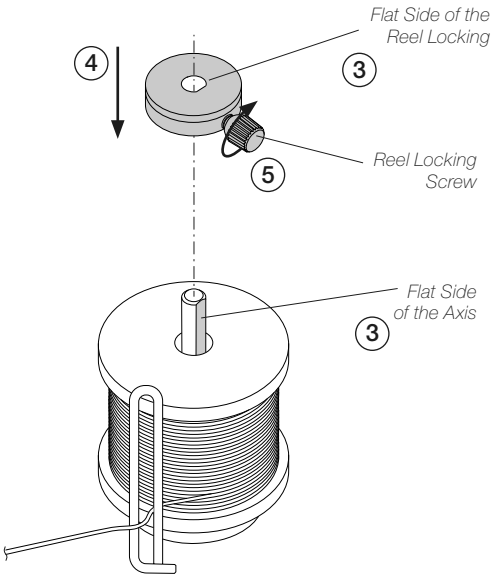

Step 3 **Cartridge Assembly**

⚠ For a safe cartridge assembly/change, make sure that the tool is unplugged and the cartridge has cooled down.

Loosen the cartridge set screw (1) and insert the cartidge up to its mark |◄ (2). **Important:** It is essential to insert the cartridge completely for a good connection.

Adjust the tip direction (3) and tighten the cartridge set screw (1).

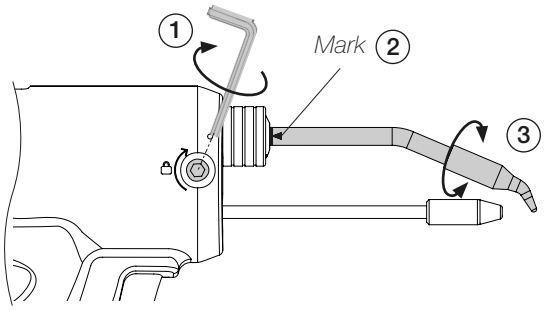

Step 4 **Guide Set Assembly**

Loosen the guide tube set screw (opposite direction to that indicated on the tool casing) (1) and insert the guide set.

Adjust the guide tube length (2). Leave a gap of 5 to 7 mm (0.197 to 0.276 in) between the tip and the outlet nozzle (3).

If necessary adjust the cartridge tip direction (4) to match the point where the wire will come out. To do this, open the cartridge set screw and tighten it when it is done (5).

Once the guide tube set position is adjusted tighten the guide tube set screw (1).

For a better handling use the clips (6) to band the guide tube and the tool cable together.

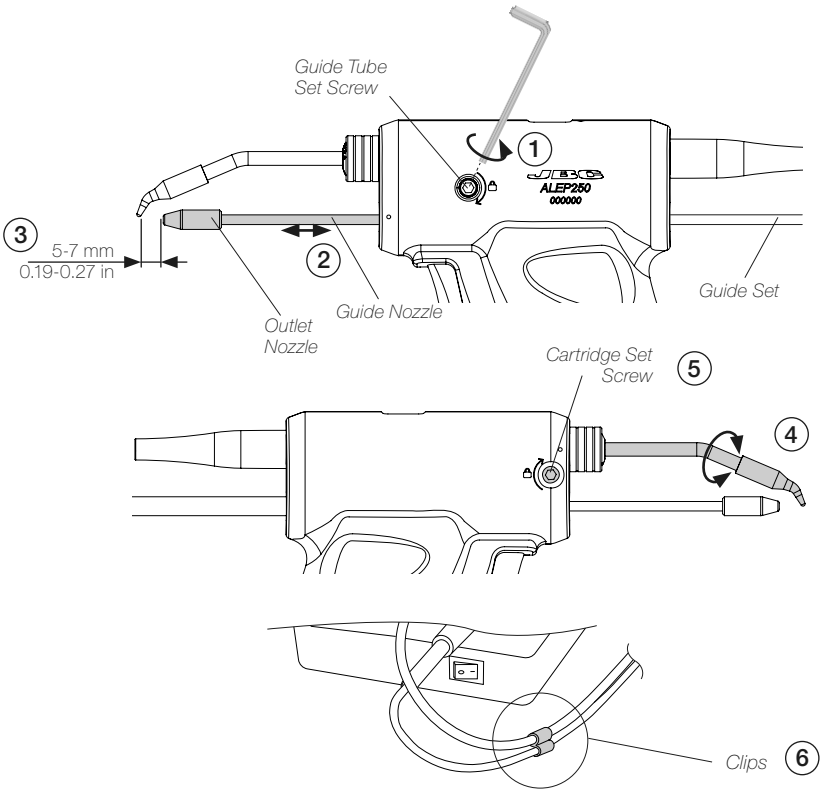

Step 5 **Tool Assembly**

Connect the tool to the control unit following these steps:

Loosen the set screw (1), insert and push the guide nozzle until it stops (2) and tighten the set screw (1).
Then plug in the tool connector (3).

ALEP250
Angled Automatic-Feed Soldering Iron

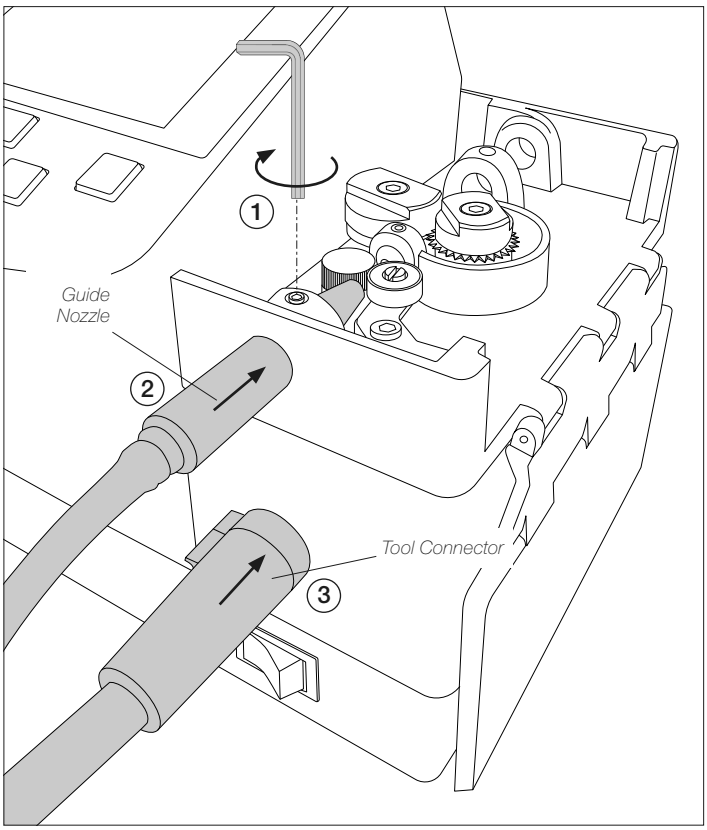

Step 6 **Stand, Pedal and Power Cord Installation**

Plug in the stand cable, the pedal cable and power cord to the control unit.

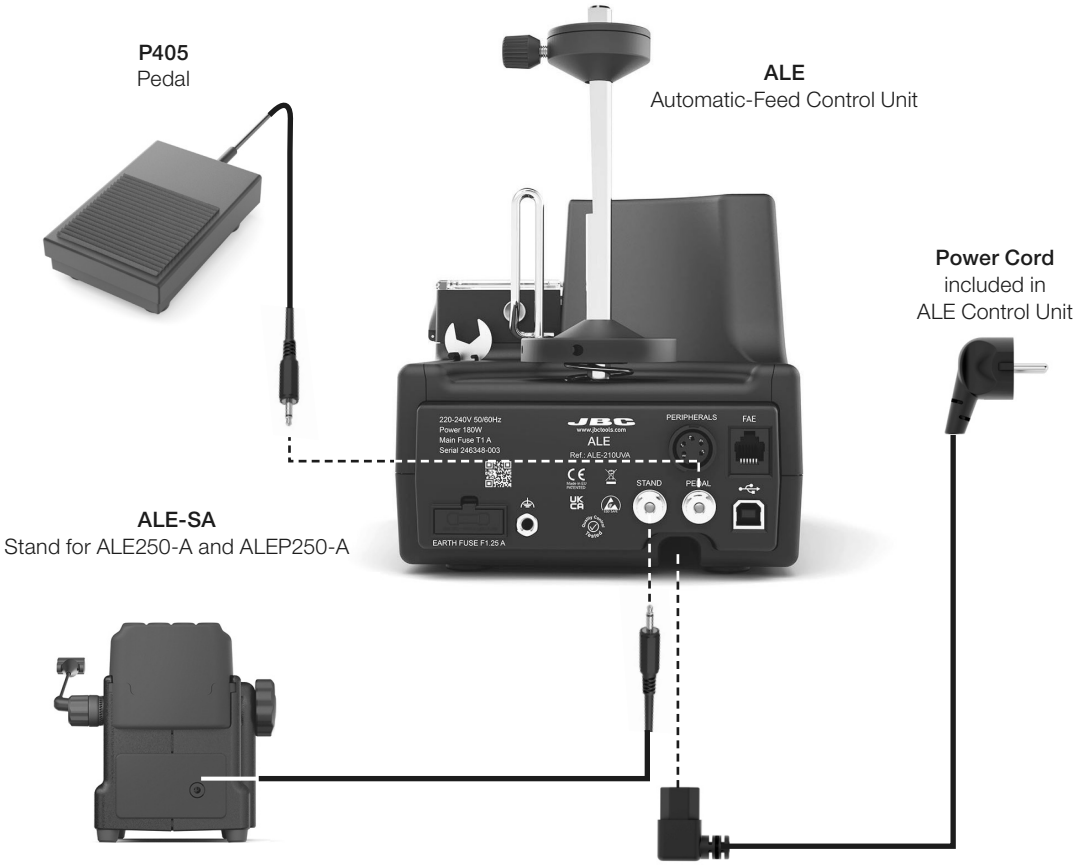

Step 7 **Station Set Up**

Hold up the tool or leave it in the tool holder and switch the station on. ⚠ Be careful, cartridge tip will get very hot.

Change the wire diameter by accessing to main menu pressing , select "*Feeder Settings*" (1) and then "*Wire Diameter*" (2) to adjust the value to the current solder wire diameter.

1

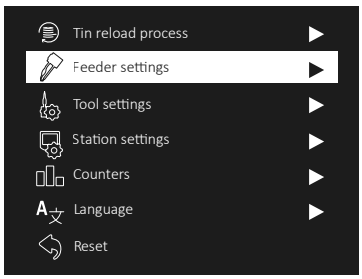

2

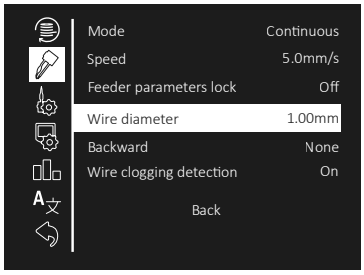

Important:
For correct operation, the diameter of the chosen solder wire must match that of the guide kit and its components (wheels, clamps and nozzles) assembled on the ALE control unit.

Guide kits for different wire diameters are available at JBC's web site, accessible via this QR code.

Step 8 **Solder Wire Loading**

Make sure that the solder wire passes through the solder wire guidance (1). Introduce the solder wire into the inlet nozzle (2) until it reaches the wheels (3).

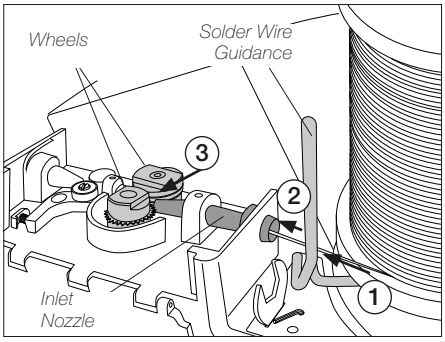

Select "*Tin Reloaded Process*" (1) and then press and hold to feed the solder wire and advance until it comes out through the outlet nozzle.

If needed, carefully push the wire until it gets locked in between the rotating wheels for the wire to start moving forward.
Keep pressed and after a while the wire will advance faster.

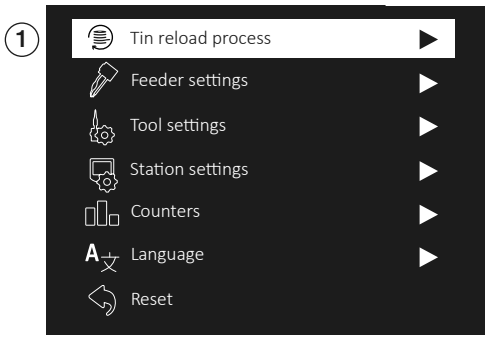

Make sure the wire passes through the intermediate nozzle (4) and enters the guide tube (5).

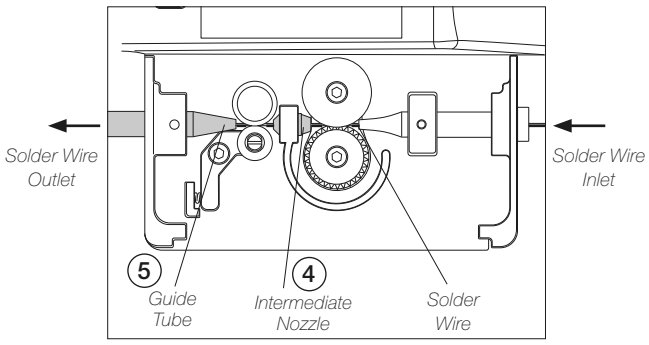

Solder Wire Feeding

Forward the solder wire pulling the trigger (1) until the wire comes out of the outlet nozzle (2).

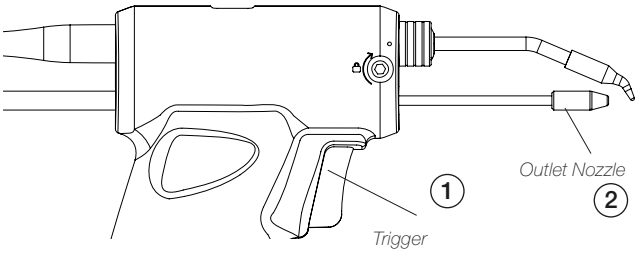

Working with Pedal

Alternatively, solder wire can also be fed using pedal P405. The pedal should be plugged in at the rear of the feeder control unit into the pedal connector.

Step 9 **Solder Wire Unloading**

With Solder Wire Perforation

To unload perforated solder wire that has already passed through the guide tube, cut the wire between the wire guidance and the inlet nozzle (1).

To extract the wire out of the tool and the guide tube, hold the tool on your hand and press until the wire stops moving forward.

Grasp the wire coming out of the outlet nozzle with a pliers and pull from it until it is completely out.

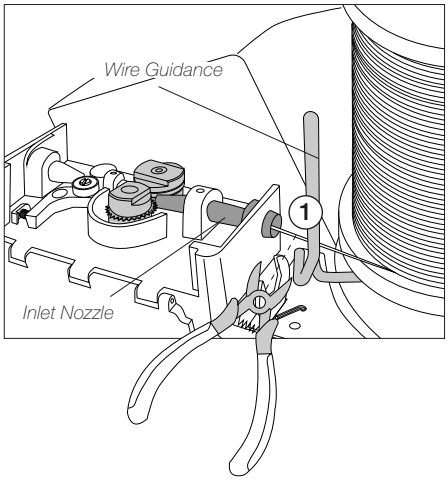

Without Solder Wire Perforation

When using a kit without solder wire perforation, press until the wire is completely wound to unload the solder wire. It is best to rotate the reel by hand as the wire is being pulled back in order to keep it neatly arranged on the reel.

Or, if preferred, proceed as described above for perforated solder wire unloading.

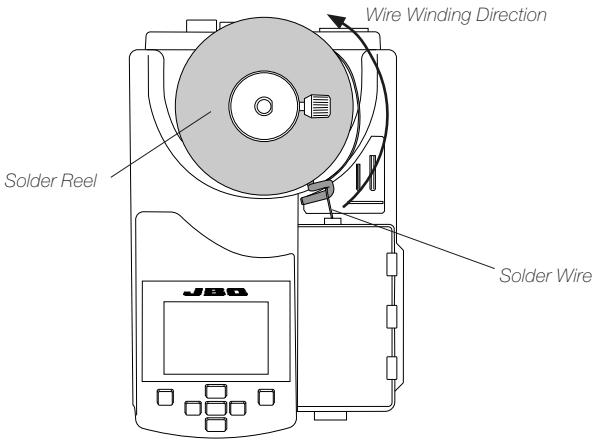

Step 10 **Control Process**

Feeder Setting Modes

Depending on the selected mode, different parameters are available for “Feeder Settings”.

Choose between “continuous”, “discontinuous” and “program” mode. Access to Main Menu by pressing , select “*Feeder Settings*” (1) and then “*Mode*” (2). For more details, check the manual of the ALE control unit or JBC’s website www.jbctools.com/auto-feed-stations.html

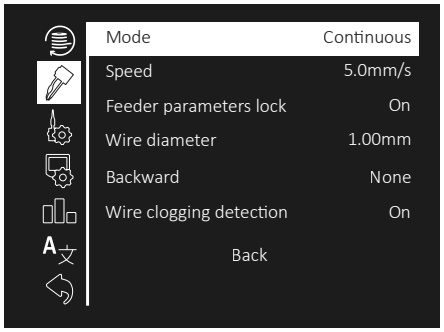

Access to ALE control unit product page

The ALE control unit’s instruction manual can be downloaded from the product page accessible via this QR code.

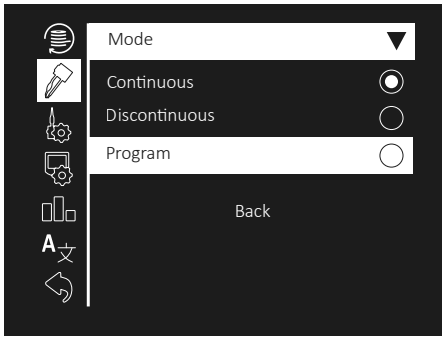

Notes

Notes

Notes

Specifications

ALEP
Angled Automatic-Feed Soldering Station
Refs.:
Wire diameter 0.8 mm
- **ALEP-108VA**
- **ALEP-208VA**
- **ALEP-908VA**

Wire diameter 1.0 mm
- **ALEP-110VA**
- **ALEP-210VA**
- **ALEP-910VA**

- Total Net Weight:	7.83 g / 17.25 lb
- Package Dimensions/Weight: (L x W x H)	545 x 345 x 275 mm / 8.50 g 21.46 x 13.58 x 10.83 in / 18.74 lb

Complies with CE standards.
ESD safe.

Warranty

Information regarding the warranty of each product can be found on the final page of its instruction manual.

This product should not be thrown in the garbage.
In accordance with the European directive 2012/19/EU, electronic equipment at the end of its life must be collected and returned to an authorized recycling facility.